ISSN: 0974-2115
www.jchps.com Journal of Chemical and Pharmaceutical Sciences

Prefabricated Crossover Bridge

Lakshminarayanan.N[1], Thiagarajan.C[1], Surendrababu.K[1], Maghesh.R[1]
Sunil kumar [2], Vikash yadav[2], Vijay nayak[2]
Department of Mechanical Engineering, Aarupadai Veedu Institute of Technology, Vinayaka Missions University
[*]Corresponding author: E-Mail: nlakshminarayanan@avit.ac.in

ABSTRACT

PREFAB structures has been widely used for construction of industrial buildings due to its many advantages over conventional structures like speed, cost, versatility and superior quality. This project is to extend the concept of PREFAB in construction of crossover bridges in cities. The advantages are manifold. The project is to design and build a scale model prototype of a flyover using PREFAB structures that will be manufactured in a factory and assembled part by part.

The design of the crossover bridge has been done with the assistance of town planners, architects and experts in civil engineering, metallurgy, and surface treatment. The PREFAB design has been analyzed for stability and durability using ANSYS software and compliance with existing bridge building standards.

To bring authenticity to the project, the TIDEL park- Indira Nagar junction at Adyar, Chennai, has been taken as a case study, where the need for such a flyover is acutely felt. This project offers a design for a flyover, built by PREFAB structures that will ensure smooth flow of traffic on all sides. This PREFAB flyover can be manufactured in individual components in shop floor with highest quality standards and erected at site with little or no diversion of existing traffic. While the conventional flyover would cost approximately Rs.100 crores and 2 years to complete, the PREFAB design can be completed in 2 months and within Rs. 20 crores. This project demonstrates the feasibility and highlights the economic advantages of adapting PREFAB concept in fabrication of steel crossover bridges in lieu of conventional civil construction.

The project has identified and selected the steel, design the fabrication of individual units, vibration dampers, anti skid coating for surface, grouting procedures and surface finishing of the PREFAB structures. The sequence of erection has also been detailed.

KEY WORDS: Put your keywords here, keywords are separated by comma.

1. INTRODUCTION

Flyovers and crossover bridges in cities have been constructed traditionally in India by conventional civil construction procedures. Every such project demands enormous amount of funds and time. Completion of one kilometre long flyover takes about 24 months and costs close to Rs. 150 crores. Moreover the traffic around that entire area is completely disrupted till the completion of the project. This is the prime reason for not constructing flyovers and crossover bridges in cities, where the need is acutely felt to ease traffic congestions during peak hours. Millions of man hours and fuel is lost in Indian cities due to these traffic stoppages. The only solution is to go in for PREFAB crossover bridges manufactured in steel structures that can address all the difficulties mentioned above.

PREFAB crossover bridges are easy to manufacture and erect at the site at lower costs than conventional civil bridges. The latest fabrication techniques and designs can be adopted in manufacture of PREFAB components. This allows us to select lean steel frame structures with plate girders and beams. The high strength to weight ratio minimizes the weight of super structures and thus minimizes the substructure cost.

PREFAB model also allows us to incorporate the emerging techniques of vibration dampening devices, surface treatment and anti skid coatings in the construction of crossover bridges. This increases the life time considerably and reduces the maintenance costs.

The key advantage of PREFAB is that the majority of components are manufactured at offsite and only the erection of the substructures and superstructures is done. Therefore, there is minimal disruption of traffic during the execution of the project and avoids hardship to the common public. The total lead time in execution of PREFAB bridge project is about 12 times faster

As the majority of PREFAB components are manufactured in factory premises, close dimensional tolerances can be maintained and all quality standards for manufacturing can be adhered to, which is not possible in conventional civil construction.

There are two broad categories in PREFAB bridge construction. One is composite RCC PREFAB construction where the concrete is used along the steel structures in the construction and the other category is the completely using PREFAB steel structures and components like beam girders, aprons, bearing and decking. This type of PREFAB is convenient for limited span crossover bridges and ensures a robust, economical and speedy construction, ideal for decongestion of traffic in cities. This project analyses in depth the components and design of steel PREFAB crossover bridge by taking a live case study of a proposed bridge in a perennially congested junction in Chennai city.

Figure.1. View Of Pre Fab Crossover Bridge

Pre-Fab Structures:

- **Truss Bridge**
- **Plate Grider Bridge**

Truss Bridge:

Figure.2. A Model Of A Truss Bridge

A Truss Bridge is a bridge whose load-bearing super structure is composed of a truss, a structure of connected elements forming triangular units. The connected elements (typically straight) may be stressed from tension, compression, or sometimes both in response to dynamic load. Truss bridges are one of the oldest type of modern bridges

Components of a Truss Bridge:

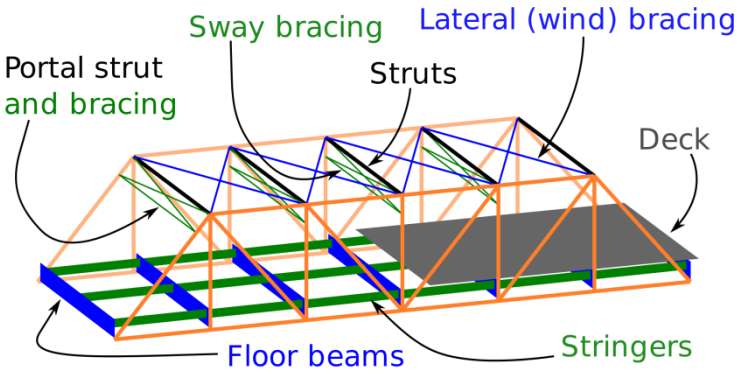

Figure.3. Components Of A Truss Bridge

Plate Grider Bridge:

Figure.4. Photograph Of A Plate Grider Bridge

Components of a Plate Grider Bridge:

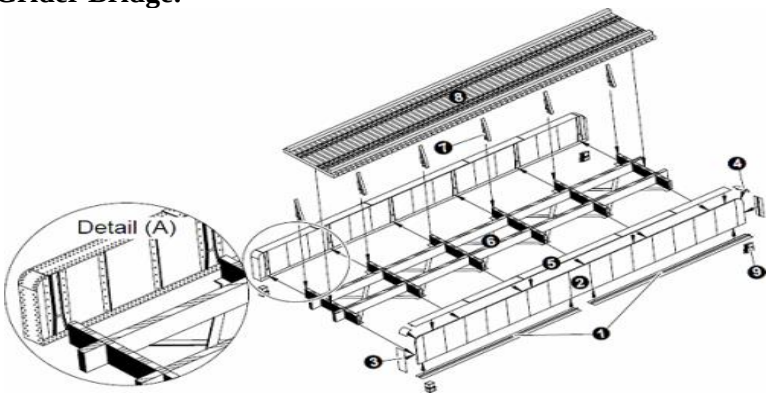

Figure.5. Elements of Plate Griger

1.Web Plate, 2.Flange Plate, 3.Bearing Stiffeners Or End Post, 4.Intermediate Transvers Stiffeners, 5.Longitudinal Stiffeners, 6.Web Splices, 7.Flange Splices, 8.Connections Between Flange And The Web, 9.End Bearing Or End Connections

Advantages of plate grider over trusses: The cost of fabrication is lower compared to trusses

- Erection is faster and cheaper than trusses
- Plate griders require smaller vertical clearances than trusses
- Due to the compactness of the plate girders, vibrations and impact are not a serious problem
- Plate girders are safer than the trusses
- Points of critical stresses are fewer in plate compared to trusses

Advantages over conventional construction

- Cost reduction
- Time reduction in manufacture
- Swift erection
- Can ensure high quality standards
- Can use vibration damping and surface coating technics
- Salvage value, can be shifted or extended

2. CONCLUSION

- The project will demonstrate the feasibility and advantages of construction of pre-fab crossovers.
- Authentic survey of sites and real time models and design of cross overs proposed.
- Inclusion of latest technology in steel fabrication, erection and surface treatment.

REFFERENCES

College of Engineering and Applied Sciences Western Michigan University, 2014.

Federal Highway Administration, PBES Cost Study: Accelerated Bridge Construction Success Stories, 2006.

Hung, V., J. Stanton, and M. Eberhard, Precast Bent System for High Seismic Regions–Laboratory Tests of Column-to-Drilled Shaft Socket Connections, FHWA-HIF-13-038, Federal Highway Administration, Washington, DC, 2013.

Michigan Department of Transportation Bridge Slide Showcase, Department of Civil & Construction Engineering